SECURITECH™

Thru-bolt bracket template #4935P VER. 3.0

For Pairs Of Doors

AS OF 11/24/98 Rev. 10/06/99 TMP4935P TB.vsd

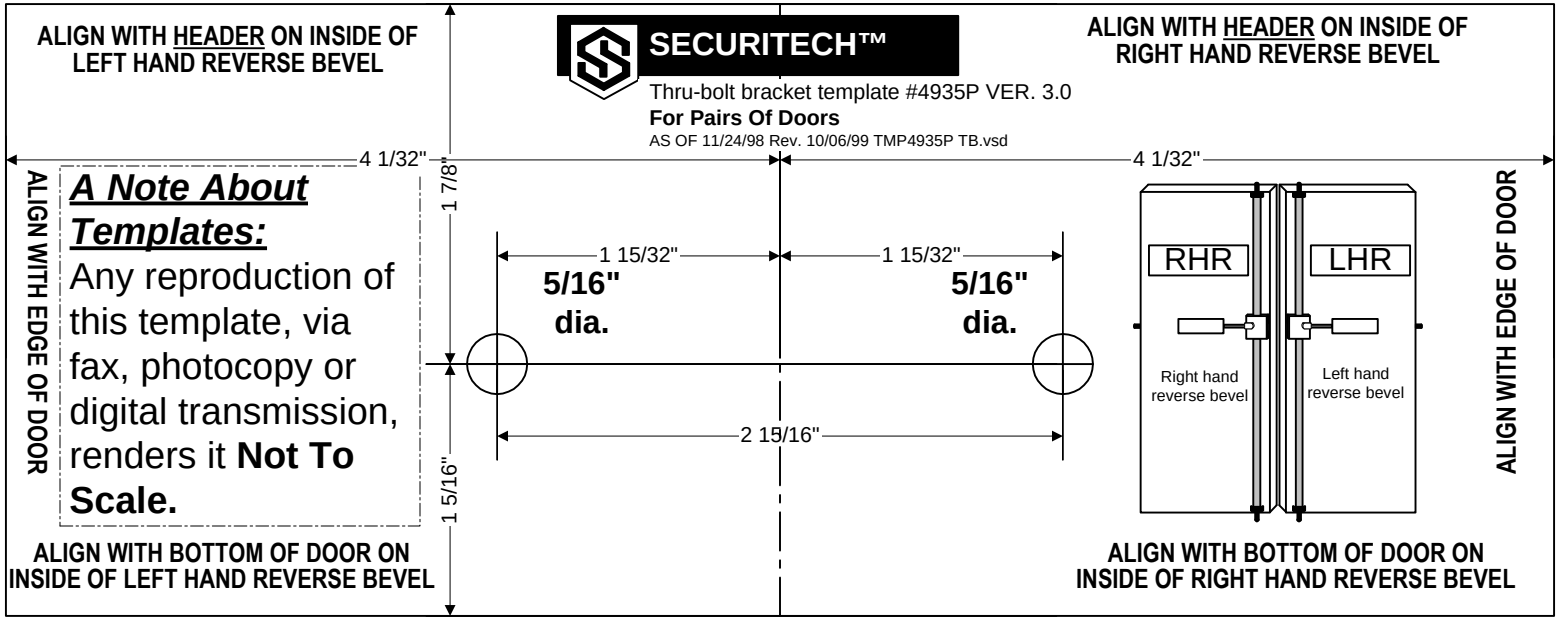

A Note About Templates:

Any reproduction of this template, via fax, photocopy or digital transmission, renders it **Not To Scale.**